YANMAR

PARTS CATALOG

0CD11-M04000EN

Last update Jul., 2011

PREFACE

1. This parts catalog is the 1st edition of 2TNV70-MTA for R&B ENGINEERING Co., Ltd.

Pub.No. : 0CD11-G04000
Published : October , 2008

2. Model name

Engine model	Vehicle	Vehicle made by
2TNV70-MTA	CRAWLER CRANE	R&B ENGINEERING Co., Ltd.

Contents

0CD11-M04000

Fig. No.	Fig. Name
2TNV70-MTA	
1.	CYLINDER BLOCK
2.	GEAR HOUSING
3.	FLYWHEEL HOUSING & OIL SUMP
4.	CYLINDER HEAD & BONNET
5.	EXHAUST MANIFOLD & SILENCER
6.	CAMSHAFT & DRIVING GEAR
7.	CRANKSHAFT & PISTON
8.	LUB.OIL SYSTEM
9.	COOLING WATER SYSTEM
10.	FUEL INJECTION PUMP
11.	GOVERNOR
12.	FUEL INJECTION VALVE
13.	FUEL FILTER
14.	STARTING MOTOR
15.	GENERATOR
16.	GASKET SET

0CD11-M04000 2TNV70-MTA

Fig.1. CYLINDER BLOCK

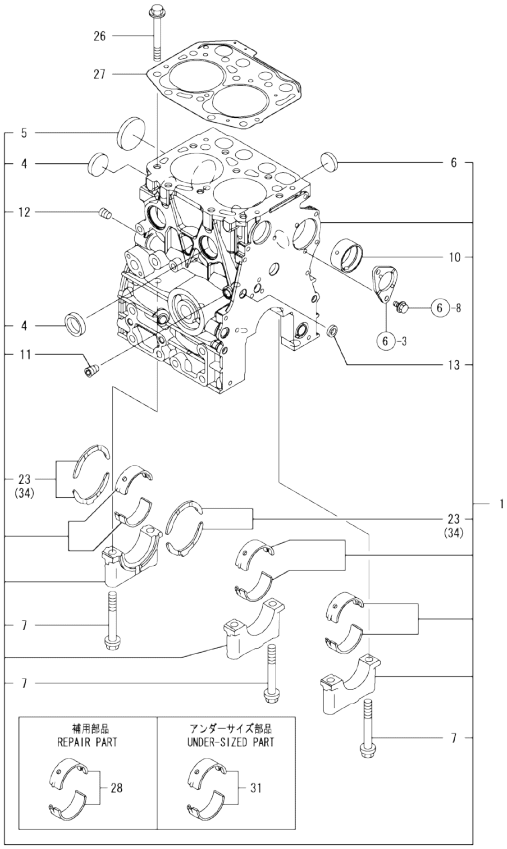

Remarks
(1) REPAIR PART.
(2) UNDER-SIZED(U.S=0.25)PART.
(3) OVER-SIZED(O.S=0.25)PART.

0CD11-M04000 Fig.1

(A)=2TNV70-MTA
(B)=
(C)=
(D)=
(E)=
(F)=

No.	Lev.	Parts No.	Description	Q'ty (A)	(B)	(C)	(D)	(E)	(F)	I	R
1	1	719415-01561	BLOCK ASSY, CYLINDER	1							
4	2	105311-01090	PLUG, 30	3							
5	2	119623-01250	PLUG, 45	1							
6	2	119285-01990	PLUG, 25	2							
7	2	119620-02020	BOLT, METAL CAP	6							
10	2	119717-02411	BUSH, CAMSHAFT	1							
11	2	124060-01050	PLUG, PT1/8	1							
12	2	124160-01910	PLUG, PT1/4	1							
13	2	27241-120000	PLUG, 12	1							
23	2	119717-02930	BEARING, THRUST	2							
26	1	119515-01200	BOLT, HEAD	10							
27	1	119415-01330	GASKET, HEAD	1							
28	1	719717-02901	BEARING, MAIN	3							1
31	1	719717-02911	BEARING, 0.25 US	3							2
34	1	119810-02941	BEARING, THRUST 0.25	2							3

N:Old ←Yes/No→ New. Q:Old ←No/Yes→ New. R:Old ←Yes/Yes→ New. S:Old ←No/No→ New. W:Add. Z:Discontinued. F:Interchangeable by set. K:Q'ty Change

Copyright (C) YANMAR CO., LTD. All RightsReserved.

Fig.2. GEAR HOUSING

(A)=2TNV70-MTA
(B)=
(C)=
(D)=
(E)=
(F)=

No.	Lev.	Parts No.	Description	Q'ty (A)	(B)	(C)	(D)	(E)	(F)	I	R
1	1	119717-01501	CASE, GEAR	1							
2	1	119717-01570	STUD	3							
3	1	119734-01590	COVER ASSY,GEAR CASE	1							
4	2	719734-01500	COVER ASSY,GEAR CASE	1							
5	3	119717-01521	COVER, GEAR CASE	1							
6	3	119717-01800	SEAL, OIL	1							
7	3	23876-030000	PLUG, R03	2							
8	2	119717-32100	COVER ASSY	1							
9	3	119717-32080	COVER	1							
10	3	129900-32130	VALVE, RELIEF	1							
11	3	129001-32320	SPRING	1							
12	3	129001-32330	PLUG	1							
13	2	119717-32110	ROTOR, INNER	1							
14	2	119717-32120	ROTOR, OUTER	1							
15	2	119802-32130	SCREW, M6X16	8							
16	1	119717-01750	COVER	1							
17	1	119660-01911	PIPE, KNOCK	4							
18	1	119624-32040	O-RING, P12.0	1							
19	1	119717-32050	O-RING, P17.0	3							
20	1	121850-51960	O-RING	1							
21	1	26106-060122	BOLT, M6X 12 PLATED	1							
22	1	26106-060162	BOLT, M6X 16 PLATED	4							
23	1	26106-060402	BOLT, M6X 40 PLATED	4							
24	1	26106-060402	BOLT, M6X 40 PLATED	3							
25	1	26106-060602	BOLT, M6X 60 PLATED	7							
26	1	26106-060652	BOLT, M6X 65 PLATED	2							
27	1	26306-080002	NUT, M8	3							
28	1	124160-01751	COVER, FILLER	1							
29	1	24311-000320	O-RING, 1AP32.0	1							

N:Old $\xleftarrow[\text{No}]{\text{Yes}}$ New. Q:Old $\xleftarrow[\text{Yes}]{\text{No}}$ New. R:Old $\xleftarrow[\text{Yes}]{\text{Yes}}$ New. S:Old $\xleftarrow[\text{No}]{\text{No}}$ New. W:Add. Z:Discontinued. F:Interchangeable by set. K:Q'ty Change

Copyright (C) YANMAR CO., LTD. All RightsReserved.

Fig.3. FLYWHEEL HOUSING & OIL SUMP

(A)=2TNV70-MTA
(B)=
(C)=
(D)=
(E)=
(F)=

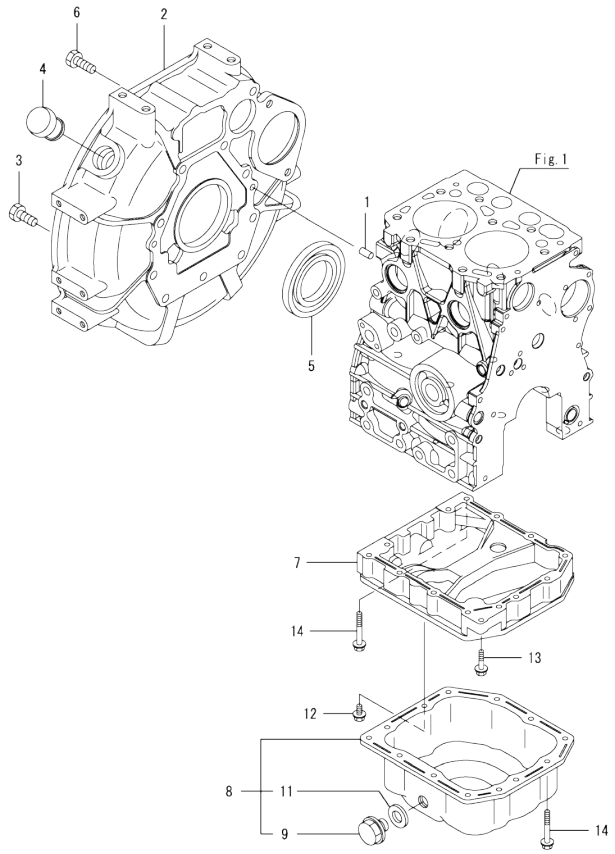

No.	Lev.	Parts No.	Description	Q'ty (A)	(B)	(C)	(D)	(E)	(F)	I	R
1	1	129100-01580	PIN, M8X16	2							
2	1	119515-01601	HOUSING, FLYWHEEL	1							
3	1	121120-01620	BOLT, M10X28	3							
4	1	119620-01750	CAP	1							
5	1	124085-02220	SEAL, OIL	1							
6	1	26206-100252	BOLT, M10X 25 PLATED	7							
7	1	119415-01720	SPACER, OIL SUMP	1							
8	1	119446-01770	SUMP ASSY, OIL	1							
9	2	105425-01690	PLUG, 16	1							
11	2	22190-160002	WASHER, SEAL 16	1							
12	1	26106-060122	BOLT, M6X 12 PLATED	1							
13	1	26106-060252	BOLT, M6X 25 PLATED	1							
14	1	26106-060452	BOLT, M6X 45 PLATED	13							

N:Old ←Yes/No→ New. Q:Old ←No/Yes→ New. R:Old ←Yes/Yes→ New. S:Old ←No/No→ New. W:Add. Z:Discontinued. F:Interchangeable by set. K:Q'ty Change

Copyright (C) YANMAR CO., LTD. All RightsReserved.

Fig.4. CYLINDER HEAD & BONNET

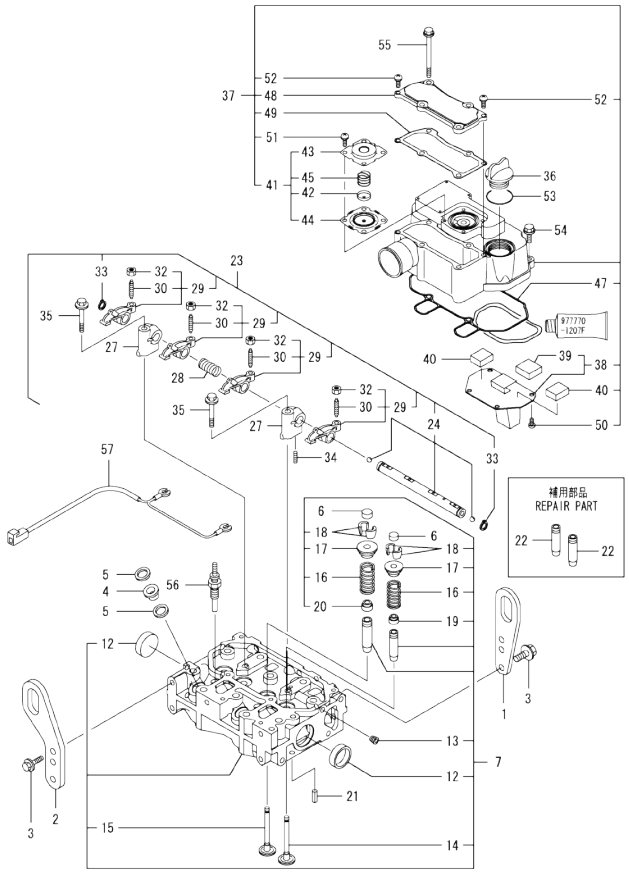

(A)=2TNV70-MTA
(B)=
(C)=
(D)=
(E)=
(F)=

No.	Lev.	Parts No.	Description	Q'ty (A)	(B)	(C)	(D)	(E)	(F)	I	R
1	1	119226-07900	LIFTER	1							
2	1	129486-07901	LIFTER	1							
3	1	26106-080142	BOLT, M8X 14 PLATED	4							
4	1	129901-11450	PROTECTOR, NOZZLE	2							
5	1	119600-11460	GASKET, NOZZLE	4							
6	1	105010-11490	CAP, VALVE	4							
7	1	119415-11740	HEAD ASSY, CYLINDER	1							
12	2	119285-11990	PLUG, 35	2							
13	2	23876-005000	PLUG, R005	1							
14	2	119515-11101	VALVE, INTAKE	2							
15	2	119515-11110	VALVE, EXHAUST	2							
16	2	119717-11131	SPRING, VALVE	4							
17	2	129508-11180	RETAINER, SPRING	4							
18	2	119717-11190	COTTER	8							
19	2	119717-11340	SEAL, VALVE STEM	2							
20	2	119717-11350	SEAL, VALVE STEM	2							
21	1	22351-060012	PIN, SPRING 6.0X12	2							
22	1	119515-11800	GUIDE, VALVE	4							1
23	1	119415-11200	SUPPORT ASSY, ARM	1							
24	2	119415-11240	SHAFT ASSY, ROCKER	1							
27	2	119717-11260	SUPPORT, ROCKER ARM	2							
28	2	119515-11280	SPRING	1							
29	2	119717-11650	ARM, ROCKER	4							
30	3	129150-11230	SCREW, VALVE ADJUST	4							
32	3	129150-11750	NUT, M8	4							
33	2	22242-000120	RING, 12	2							
34	2	26979-050162	SCREW, M5X16	1							
35	1	26106-080402	BOLT, M8X 40 PLATED	2							
36	1	124160-01751	COVER, FILLER	1							
37	1	119415-11380	BONNET ASSY, HEAD	1							
38	2	119717-03031	PLATE	1							
39	3	119717-03070	BAFFLE, BREATHER	1							
40	2	119717-03070	BAFFLE, BREATHER	2							
41	2	119802-03100	DIAPHRAGM ASSY	1							
42	3	119802-03110	PLATE	1							
43	3	119802-03121	COVER, DIAPHRAGM	1							
44	3	119802-03131	DIAPHRAGM	1							
45	3	119802-03141	SPRING, DIAPHRAGM	1							
47	2	119415-11310	GASKET, BONNET	1							
48	2	119415-11320	COVER, BONNET	1							
49	2	119415-11330	GASKET	1							
50	2	22857-500100	SCREW, 5X10	4							
51	2	22857-500100	SCREW, 5X10	4							
52	2	22857-500160	SCREW, 5X16	2							
53	1	24311-000320	O-RING, 1AP32.0	1							
54	1	26106-060202	BOLT, M6X 20 PLATED	2							
55	1	26106-060752	BOLT, M6X 75 PLATED	4							
56	1	119717-77800	PLUG, GLOW	2							
57	1	119415-77820	CONNECTOR, GLOW PLUG	1							

Remarks
(1) REPAIR PART.

N:Old ←Yes/No→ New. Q:Old ←No/Yes→ New. R:Old ←Yes/Yes→ New. S:Old ←No/No→ New. W:Add. Z:Discontinued. F:Interchangeable by set. K:Q'ty Change

Copyright (C) YANMAR CO., LTD. All RightsReserved.

Fig.5. EXHAUST MANIFOLD & SILENCER

(A)=2TNV70-MTA
(B)=
(C)=
(D)=
(E)=
(F)=

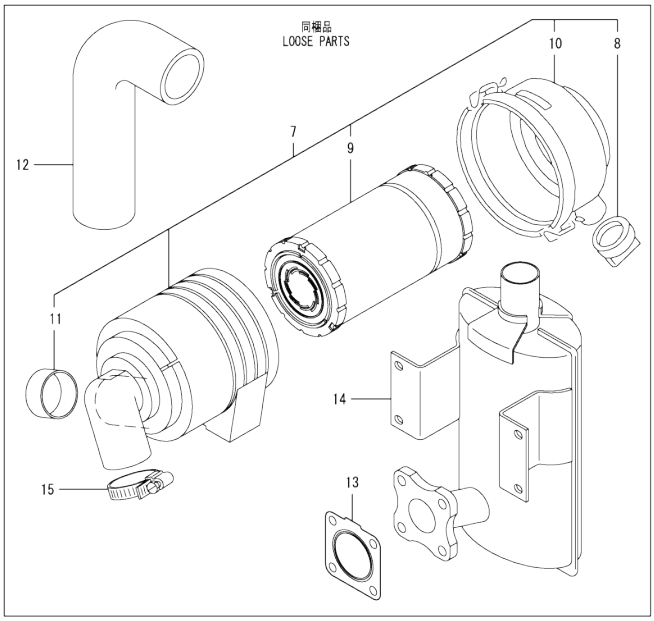

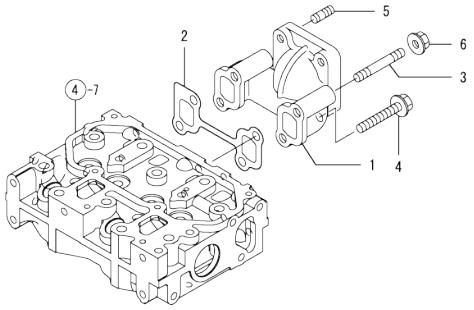

No.	Lev.	Parts No.	Description	Q'ty (A)	(B)	(C)	(D)	(E)	(F)	I	R
1	1	119415-13100	MANIFOLD, EXHAUST	1							
2	1	119415-13110	GASKET	1							
3	1	119717-13600	STUD, M8X50	2							
4	1	119802-13620	BOLT, M8X50	2							
5	1	119131-18320	STUD, M8X22	4							
6	1	26306-080002	NUT, M8	2							
7	1	119325-12550	CLEANER ASSY, AIR	1							
8	2	119808-12540	VALVE, UNLOADER	1							
9	2	119655-12560	ELEMENT	1							
10	2	119686-12570	COVER ASSY	1							
11	2	105027-12580	RING	1							
12	1	119641-12570	PIPE, AIR INTAKE	1							
13	1	119515-13200	GASKET, SILENCER	3							
14	1	119325-13500	SILENCER	1							
15	1	23000-060000	CLAMP, 60	2							

N:Old ←Yes/No→ New. Q:Old ←No/Yes→ New. R:Old ←Yes/Yes→ New. S:Old ←No/No→ New. W:Add. Z:Discontinued. F:Interchangeable by set. K:Q'ty Change

Copyright (C) YANMAR CO., LTD. All RightsReserved.

Fig.6. CAMSHAFT & DRIVING GEAR

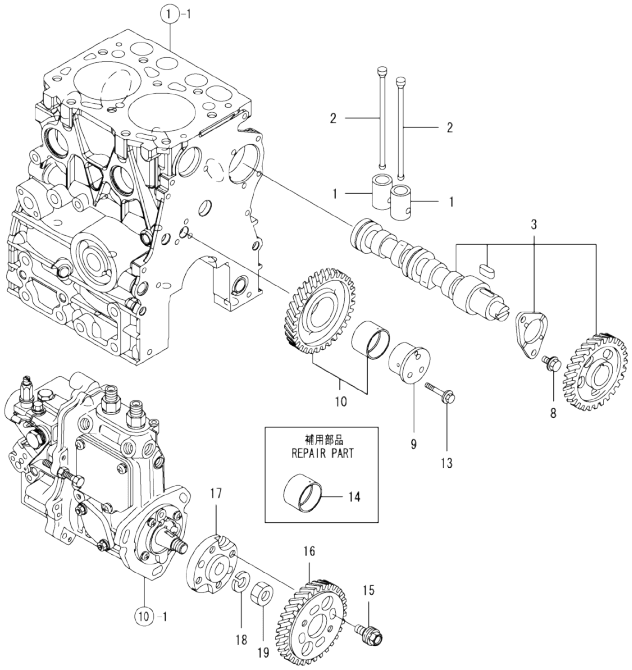

(A)=2TNV70-MTA
(B)=
(C)=
(D)=
(E)=
(F)=

No.	Lev.	Parts No.	Description	Q'ty (A)	(B)	(C)	(D)	(E)	(F)	I	R
1	1	119620-14200	TAPPET	4							
2	1	119515-14400	ROD, PUSH	4							
3	1	119415-14581	CAMSHAFT ASSY	1							
8	1	26106-060122	BOLT, M6X 12 PLATED	2							
9	1	119717-25050	SHAFT, IDLE	1							
10	1	119717-25101	GEAR ASSY, IDLE	1							
13	1	26106-060352	BOLT, M6X 35 PLATED	3							
14	1	119717-25911	BUSH, IDLE GEAR	1							1
15	1	129150-25301	BOLT	4							
16	1	119717-25930	GEAR, PUMP	1							
17	1	119717-51150	FLANGE	1							
18	1	22217-120000	WASHER, SPRING 12	1							
19	1	26716-120002	NUT, M12	1							

Remarks
(1) REPAIR PART.

N:Old ←Yes/No→ New. Q:Old ←No/Yes→ New. R:Old ←Yes/Yes→ New. S:Old ←No/No→ New. W:Add. Z:Discontinued. F:Interchangeable by set. K:Q'ty Change

Copyright (C) YANMAR CO., LTD. All RightsReserved.

Fig.7. CRANKSHAFT & PISTON

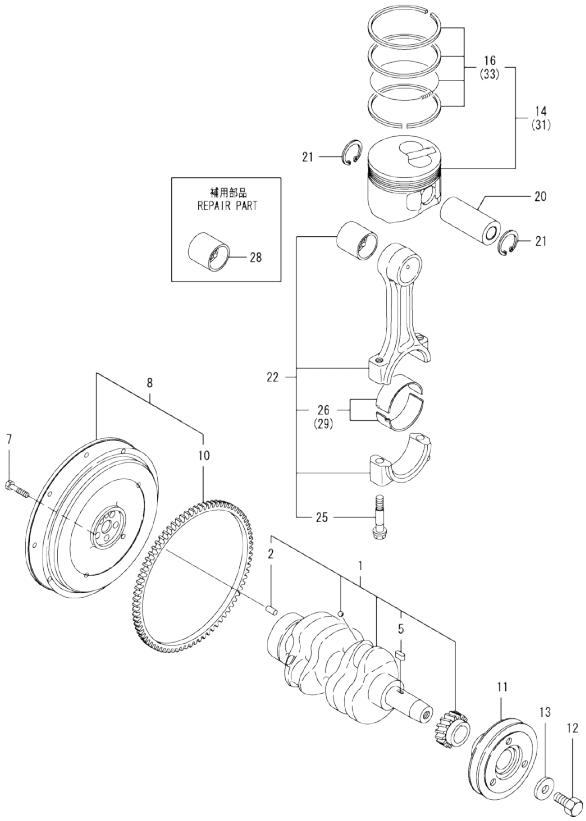

Remarks
(1) REPAIR PART.
(2) UNDER-SIZED(U.S=0.25)PART.
(3) OVER-SIZED(O.S=0.25)PART.

(A)=2TNV70-MTA (D)=
(B)= (E)=
(C)= (F)=

No.	Lev.	Parts No.	Description	Q'ty (A)	(B)	(C)	(D)	(E)	(F)	I	R
1	1	119415-21700	CRANKSHAFT ASSY	1							
2	2	129100-01580	PIN, M8X16	1							
5	2	22512-040120	KEY, 4X 12	1							
7	1	119620-21500	BOLT, FLYWHEEL	5							
8	1	119515-21570	FLYWHEEL ASSY	1							
10	2	124950-21600	GEAR, RING	1							
11	1	119717-21650	V-PULLEY	1							
12	1	119621-21680	BOLT, FLANGE 12X1.25	1							
13	1	119620-21941	WASHER	1							
14	1	119515-22080	PISTON ASSY	2							
16	2	119515-22500	RING SET, PISTON	2							
20	1	119515-22300	PIN, PISTON	2							
21	1	22252-000220	RING, 22	4							
22	1	119515-23000	ROD ASSY, CONNECTING	2							
25	2	119717-23200	BOLT, CONNECTING ROD	4							
26	2	119515-23601	BEARING, CRANK PIN	2							
28	1	119717-23910	BEARING, PISTON PIN	2							1
29	1	119515-23611	METAL ASSY, 0.25	2							2
31	1	119515-22900	PISTON ASSY, 0.25 OS	2							3
33	2	119515-22550	RING SET, 0.25 OS	2							3

N:Old ←Yes/No→ New. Q:Old ←No/Yes→ New. R:Old ←Yes/Yes→ New. S:Old ←No/No→ New. W:Add. Z:Discontinued. F:Interchangeable by set. K:Q'ty Change

Copyright (C) YANMAR CO., LTD. All RightsReserved.

Fig.8. LUB.OIL SYSTEM

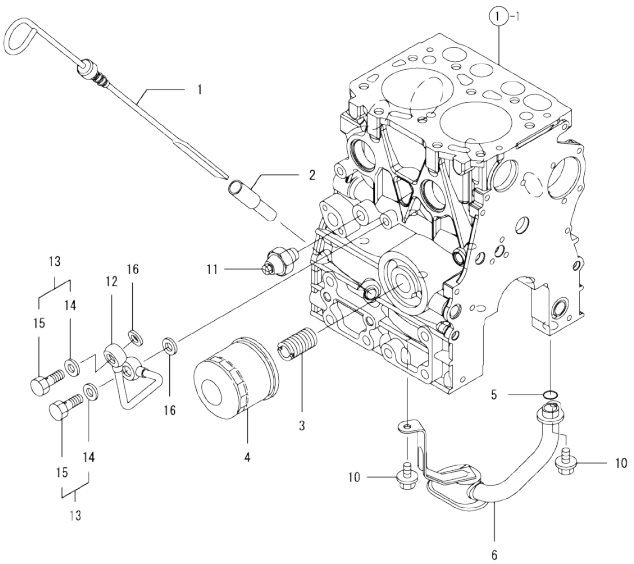

Remarks
(1) REPAIR PART.

(A)=2TNV70-MTA
(B)=
(C)=
(D)=
(E)=
(F)=

No.	Lev.	Parts No.	Description	Q'ty (A)	(B)	(C)	(D)	(E)	(F)	I	R
1	1	119446-34801	DIPSTICK, OIL	1							
2	1	121520-34810	GUIDE, DIPSTICK	1							
3	1	129100-35140	STUD	1							
4	1	119305-35151	FILTER ASSY, D68XL65	1							1
5	1	119717-32060	O-RING, P15.0	1							
6	1	119446-35080	PIPE ASSY, OIL INLET	1							
10	1	26106-060102	BOLT, M6X 10 PLATED	2							
11	1	114250-39450	SWITCH, 0.5KG	1							
12	1	119415-39211	PIPE, OIL	1							
13	1	129005-59830	BOLT ASSY, JOINT M8	2							
14	2	22190-080002	WASHER, SEAL 6	2							
15	2	23857-030000	BOLT, JOINT 3	2							
16	1	22190-080002	WASHER, SEAL 6	2							

N:Old ←Yes/No→ New. Q:Old ←No/Yes→ New. R:Old ←Yes/Yes→ New. S:Old ←No/No→ New. W:Add. Z:Discontinued. F:Interchangeable by set. K:Q'ty Change

Copyright (C) YANMAR CO., LTD. All RightsReserved.

Fig.9. COOLING WATER SYSTEM

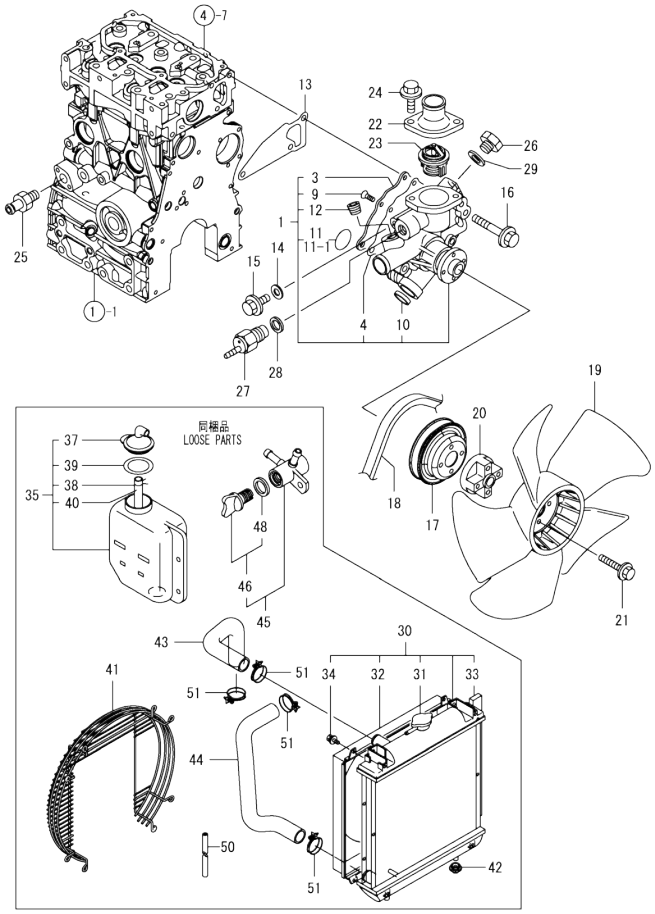

(A)=2TNV70-MTA (D)=
(B)= (E)=
(C)= (F)=

No.	Lev.	Parts No.	Description	Q'ty (A)	(B)	(C)	(D)	(E)	(F)	I	R
1	1	119540-42000	PUMP ASSY, WATER	1							
1-1	1	119C10-42000	PUMP ASSY, WATER	1						N	
	(A=ED7289)										
3	2	119515-42041	COVER	1							
4	2	119717-42031	GASKET	1							
9	2	26577-060122	SCREW, M6X12	4							
10	2	27241-250000	PLUG, 25	1							
11	2	119717-42320	O-RING, P26	1							
11-1	2	119C10-42320	O-RING, 2028	1						S	
	(A=ED7289)										
12	2	129916-49740	PLUG, R3/8	1							
13	1	119515-42020	GASKET, WATER PUMP	1							
14	1	23414-080000	GASKET, 8X1.0	1							
15	1	26106-080122	BOLT, M8X 12 PLATED	1							
16	1	26106-080502	BOLT, M8X 50 PLATED	3							
17	1	119740-42350	V-PULLEY, D=90	1							
18	1	121522-42290	V-BELT, A34.5	1							
19	1	119233-44740	FAN, D=290XUH	1							
20	1	121267-44760	SPACER, FAN	1						Z	
	(A=*2009.02)										
20-1	1	129030-44760	SPACER, FAN L38.5	1						W	
21	1	26106-060302	BOLT, M6X 30 PLATED	4						Z	
21-1	1	26106-060502	BOLT, M6X 50 PLATED	4						W	
	(A=*2009.02)										
22	1	129350-49530	COVER, THERMOSTAT	1							
23	1	119717-49800	THERMOSTAT, 71C	1							
24	1	26106-080202	BOLT, M8X 20 PLATED	2							
25	1	121550-49111	JOINT, PT1/4	1							
26	1	121450-42450	PLUG, M16	1							
27	1	121250-44901	SWITCH, THERMO 110	1							
28	1	124465-44950	GASKET, 16	1							
29	1	124465-44950	GASKET, 16	1							
30	1	119717-44500	RADIATOR ASSY	1							
31	2	129107-44590	CAP, RADIATOR	1							
32	2	119515-44600	SHROUD	1							
33	2	119515-44610	GASKET	2							
34	2	26014-060122	BOLT, M6X 12	4							
35	1	121468-44520	TANK ASSY, SUB	1							
37	2	121450-44531	CAP	1							
38	2	124450-44560	CLAMP, HOSE	1							
39	2	121470-44581	GASKET	1							
40	2	23065-070130	PIPE, 7X 130	1							
41	1	119802-44560	GUARD	1						Z	
41-1	1	119802-44570	GUARD, FAN	1						W	
	(A=*2009.02)										
42	1	119255-44660	ABSORBER	2							
43	1	119802-49010	HOSE, WATER	1							
44	1	119940-49020	PIPE, WATER	1							
45	1	129150-49100	COCK ASSY, 3-WAY	1							
46	2	129150-49080	COCK, DRAIN	1							
48	3	119629-49080	GASKET	1							

N:Old ←Yes/No→ New. Q:Old ←No/Yes→ New. R:Old ←Yes/Yes→ New. S:Old ←No/No→ New. W:Add. Z:Discontinued. F:Interchangeable by set. K:Q'ty Change

++ CONTINUE ++

Copyright (C) YANMAR CO., LTD. All RightsReserved.

Fig.9. COOLING WATER SYSTEM

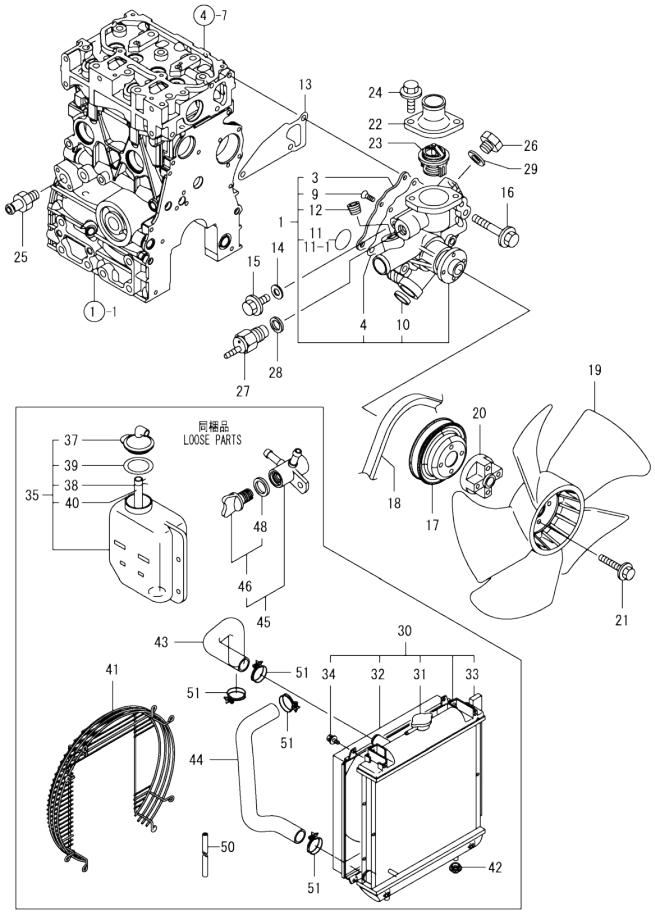

(A)=2TNV70-MTA (D)=
(B)= (E)=
(C)= (F)=

No.	Lev.	Parts No.	Description	Q'ty (A)	(B)	(C)	(D)	(E)	(F)	I	R
50	1	171351-49170	HOSE, DRAIN	1							
51	1	23010-038000	CLAMP, 38	4							

N:Old ←Yes/No→ New. Q:Old ←No/Yes→ New. R:Old ←Yes/Yes→ New. S:Old ←No/No→ New. W:Add. Z:Discontinued. F:Interchangeable by set. K:Q'ty Change

Copyright (C) YANMAR CO., LTD. All RightsReserved.

Fig.10. FUEL INJECTION PUMP

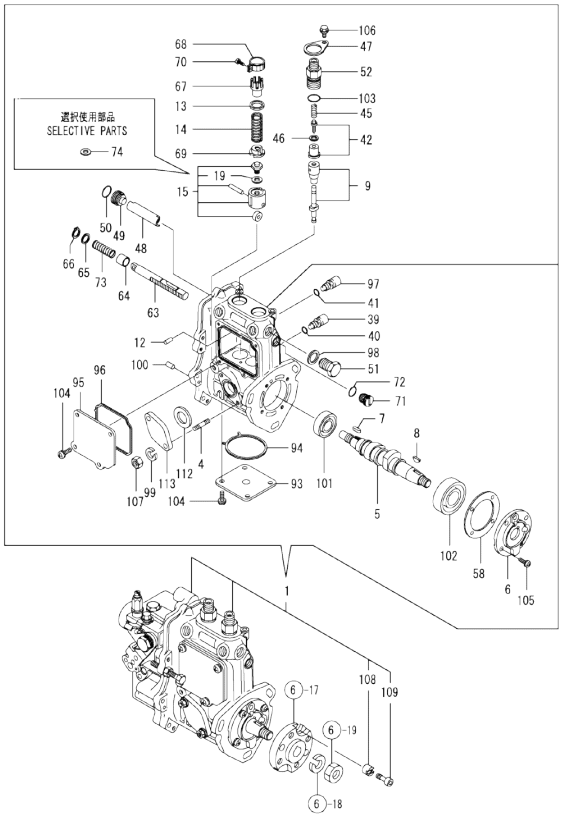

Remarks
(1) GOVERNOR ASSY(FIG.11) IS INCORPORATED IN THIS FUEL INJECTION PUMP(REF.NO.1).
(2) SELECTIVE PARTS.

(A)=2TNV70-MTA (D)=
(B)= (E)=
(C)= (F)=

No.	Lev.	Parts No.	Description	Q'ty (A)	(B)	(C)	(D)	(E)	(F)	I	R
1	1	719440-51430	PUMP ASSY, INJECTION	1							1
4	2	129155-51020	STUD	2							
5	2	119415-51030	CAMSHAFT	1							
6	2	119717-51060	SUPPORT, CAMSHAFT	1							
7	2	119717-51070	KEY	1							
8	2	122710-51090	KEY	1							
9	2	119515-51100	PLUNGER ASSY	2							
12	2	129155-51140	PIN	2							
13	2	158600-51170	RETAINER, SPRING	2							
14	2	119717-51190	SPRING, PLUNGER	2							
15	2	119717-51200	TAPPET ASSY	2							
19	3	129155-51600	SHIM SET, ADJUSTING	2							
39	2	158600-51270	STOPPER, TAPPET	2							
40	2	129155-51280	O-RING, S6	2							
41	2	129155-51280	O-RING, S6	1							
42	2	119717-51300	VALVE ASSY, DELIVERY	2							
45	2	119717-51330	SPRING, DELIVERY	2							
46	2	124550-51350	GASKET, DELIVERY	2							
47	2	118400-51370	LOCKING	2							
48	2	119415-51400	PROTECTOR	1							
49	2	158600-51410	PLUG, DEFLECTOR	1							
50	2	119717-51420	O-RING	1							
51	2	158600-51420	PLUG, DEFLECTOR	1							
52	2	158600-51442	VALVE ASSY, DELIVERY	2							
58	2	129155-51450	SHIM SET, ADJUSTING	1							
63	2	119415-51500	RACK, CONTROL	1							
64	2	129155-51521	BUSH, RACK	1							
65	2	129155-51530	SPACER	1							
66	2	129155-51540	CIRCLIP	1							
67	2	129155-51550	PINION, CONTROL	2							
68	2	129100-51560	PINION	2							
69	2	119717-51570	RETAINER, SPRING	2							
70	2	129100-51570	SCREW	2							
71	2	158600-51570	PLUG	1							
72	2	129155-51580	O-RING	1							
73	2	129155-51591	SPRING, RACK	1							
74	2	129155-51600	SHIM SET, ADJUSTING	2							2
93	2	119415-51700	COVER	1							
94	2	119415-51710	GASKET	1							
95	2	119415-51750	COVER	1							
96	2	119415-51760	GASKET	1							
97	2	158600-51790	STOOPER, RACK	1							
98	2	22190-160002	WASHER, SEAL 16	1							
99	2	22217-060000	WASHER, SPRING 6	2							
100	2	22351-050010	PIN, SPRING 5.0X10	2							
101	2	24101-060034	BEARING, BALL 6003	1							
102	2	24101-063034	BEARING, BALL 6303	1							
103	2	24316-000150	O-RING, 4DP15.0	2							
104	2	26022-050122	SCREW, M5X12	8							
105	2	26022-060162	SCREW, M6X16	4							
106	2	26106-050102	BOLT, M5X 10 PLATED	2							

N:Old ←Yes/No→ New. Q:Old ←No/Yes→ New. R:Old ←Yes/Yes→ New. S:Old ←No/No→ New. W:Add. Z:Discontinued. F:Interchangeable by set. K:Q'ty Change

++ CONTINUE ++

Copyright (C) YANMAR CO., LTD. All RightsReserved.

Fig.10. FUEL INJECTION PUMP

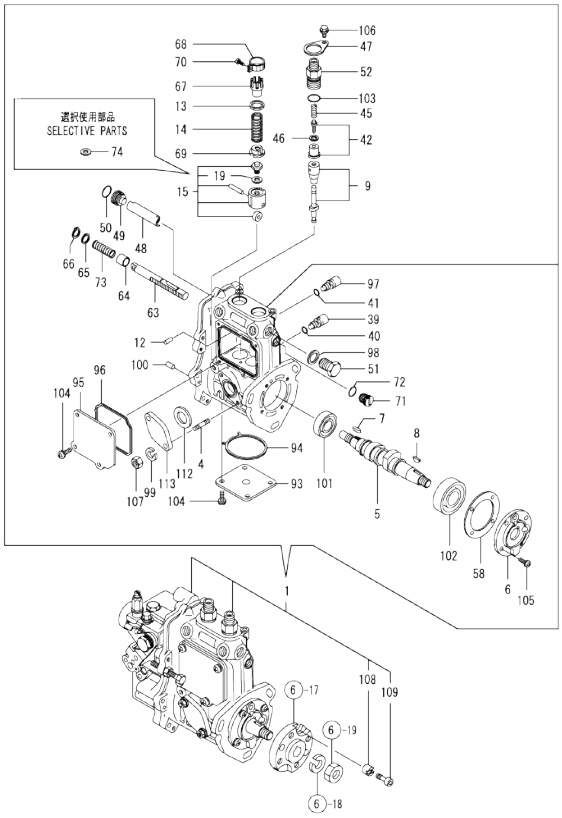

Remarks
(1) GOVERNOR ASSY(FIG.11) IS INCORPORATED IN THIS FUEL INJECTION PUMP(REF.NO.1).
(2) SELECTIVE PARTS.

(A)=2TNV70-MTA (D)=
(B)= (E)=
(C)= (F)=

No.	Lev.	Parts No.	Description	Q'ty (A)	(B)	(C)	(D)	(E)	(F)	I	R
107	2	26716-060002	NUT, M6	2							
108	2	119717-51480	COLLAR	1							
109	2	119717-51490	BOLT	1							
112	2	129155-52051	GASKET	1							
113	2	129100-52200	COVER	1							

N:Old ←Yes/No→ New. Q:Old ←No/Yes→ New, R:Old ←Yes/Yes→ New. S:Old ←No/No→ New. W:Add. Z:Discontinued. F:Interchangeable by set. K:Q'ty Change

Copyright (C) YANMAR CO., LTD. All RightsReserved.

Fig.11. GOVERNOR

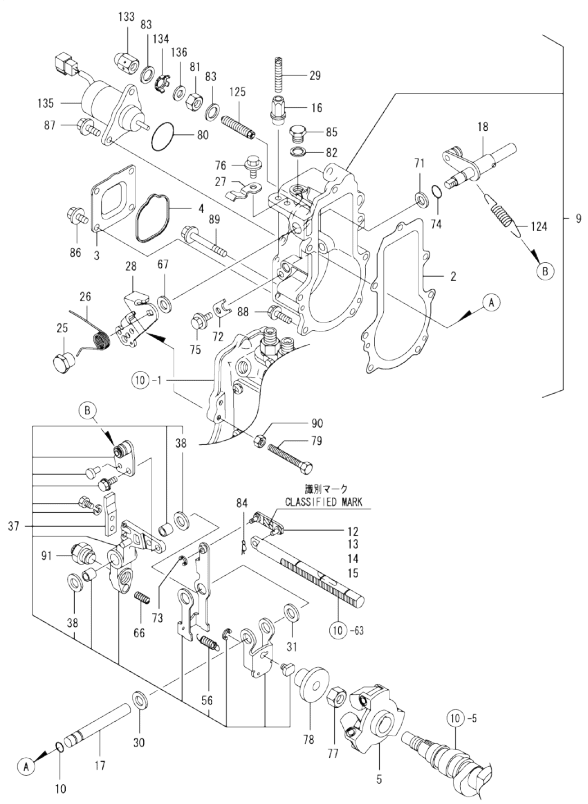

Remarks
* THIS FIGURE(GOVERNOR ASSY)IS INCORPORATED IN THE FUEL INJECTION PUMP ASSY(FIG.10).
(1) SELECTIVE PARTS;CERTAIN THE CLASSIFICATION MARK,THEN PLACE YOUR ORDER(REF.TO ILLUSTRATION).

(A)=2TNV70-MTA (D)=
(B)= (E)=
(C)= (F)=

No.	Lev.	Parts No.	Description	Q'ty (A)	(B)	(C)	(D)	(E)	(F)	I	R
2	2	119717-61050	GASKET	1							
3	2	119717-61060	COVER, GOVERNOR CASE	1							
4	2	119717-61070	GASKET	1							
5	2	119717-61200	WEIGHT ASSY,GOVERNOR	1							
9	2	119540-61300	CASE ASSY, GOVERNOR	1							
10	3	129155-51280	O-RING, S6	1							
12	3	119717-61120	LINK, MARK :3	1							1
13	3	119717-61130	LINK, MARK 98	1							1
14	3	119717-61140	LINK, MARK 88	1							1
15	3	119717-61150	LINK, MARK 03	1							1
16	3	129209-61370	NUT, M6	1							
17	3	129052-61390	SHAFT	1							
18	3	119717-61400	SHAFT ASSY	1							
25	3	129255-61410	NUT, LOCK	1							
26	3	119534-61420	SPRING	1							
27	3	119534-61430	RETAINER	1							
28	3	119515-61440	LEVER, CONTROL	1							
29	3	129155-61450	BOLT, LIMITER	1							
30	3	129156-61460	SHIM, T=0.6	1							
31	3	129155-61480	SPACER ASSY	1							
37	3	119761-61500	LEVER ASSY, GOVERNOR	1							
38	4	174307-51700	SHIM SET	2							
56	4	129486-61540	SPRING, SET	1							
66	3	129100-61650	SPRING, CONTROLLER	1							
67	3	158552-61700	SHIM SET	1							
71	3	158552-61710	SHIM, T=1.0	1							
72	3	119660-61901	RETAINER, SHAFT	1							
73	3	22272-000030	RING, E- 3	1							
74	3	24341-000070	O-RING, 1AS7.0	1							
75	3	26106-060102	BOLT, M6X 10 PLATED	1							
76	3	26106-060102	BOLT, M6X 10 PLATED	1							
77	2	129008-61301	NUT	1							
78	2	129155-61341	SLEEVE	1							
79	2	129155-61460	BOLT, IDLE	1							
80	2	158552-61900	O-RING	1							
81	2	129209-61920	NUT, ARB	1							
82	2	22190-100002	WASHER, SEAL 10	1							
83	2	22190-120002	WASHER, SEAL 12	2							
84	2	22372-040000	PIN, SNAP 4	1							
85	2	23887-100002	PLUG, 10	1							
86	2	26106-060102	BOLT, M6X 10 PLATED	4							
87	2	26106-060142	BOLT, M6X 14 PLATED	2							
88	2	26106-060202	BOLT, M6X 20 PLATED	4							
89	2	26106-060452	BOLT, M6X 45 PLATED	3							
90	2	26756-060002	NUT, LOCK M6	1							
91	2	119515-61550	ANGLEICH ASSY	1							
124	2	129500-61720	SPRING, GOVERNOR	1							
125	2	158601-61790	LIMITER ASSY, FUEL	1							
133	2	129209-61930	NUT, CAP	1							
134	2	129209-61970	PLATE	1							
135	2	119233-77932	SOLENOID, STOP	1							

N:Old ←Yes/No→ New. Q:Old ←No/Yes→ New. R:Old ←Yes/Yes→ New. S:Old ←No/No→ New. W:Add. Z:Discontinued. F:Interchangeable by set. K:Q'ty Change

++ CONTINUE ++

Copyright (C) YANMAR CO., LTD. All RightsReserved.

Fig.11. GOVERNOR

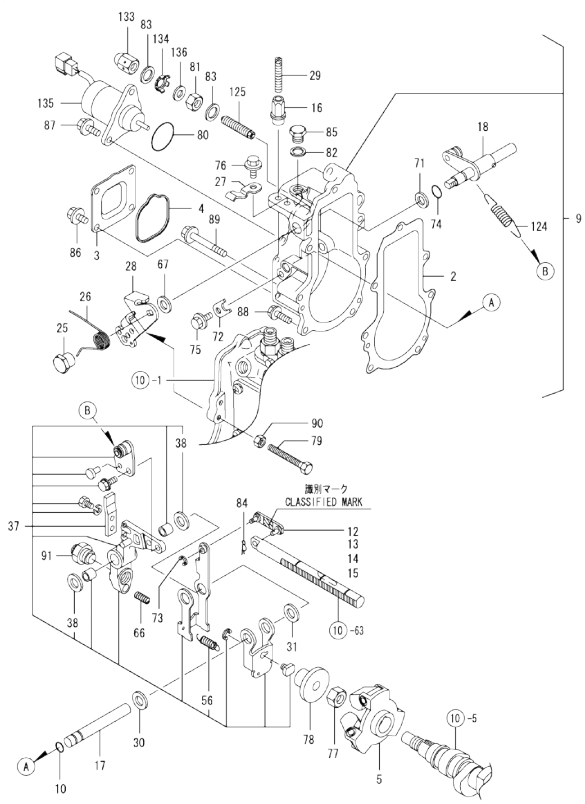

Remarks
* THIS FIGURE(GOVERNOR ASSY)IS INCORPORATED IN THE FUEL INJECTION PUMP ASSY(FIG.10).
(1) SELECTIVE PARTS;CERTAIN THE CLASSIFICATION MARK,THEN PLACE YOUR ORDER(REF.TO ILLUSTRATION).

(A)=2TNV70-MTA (D)=
(B)= (E)=
(C)= (F)=

No.	Lev.	Parts No.	Description	Q'ty (A)	(B)	(C)	(D)	(E)	(F)	I	R
136	2	23414-120016	GASKET, 12X1.0	1							

N:Old ←Yes/No→ New. Q:Old ←No/Yes→ New. R:Old ←Yes/Yes→ New. S:Old ←No/No→ New. W:Add. Z:Discontinued. F:Interchangeable by set. K:Q'ty Change

Copyright (C) YANMAR CO., LTD. All RightsReserved.

Fig.12. FUEL INJECTION VALVE

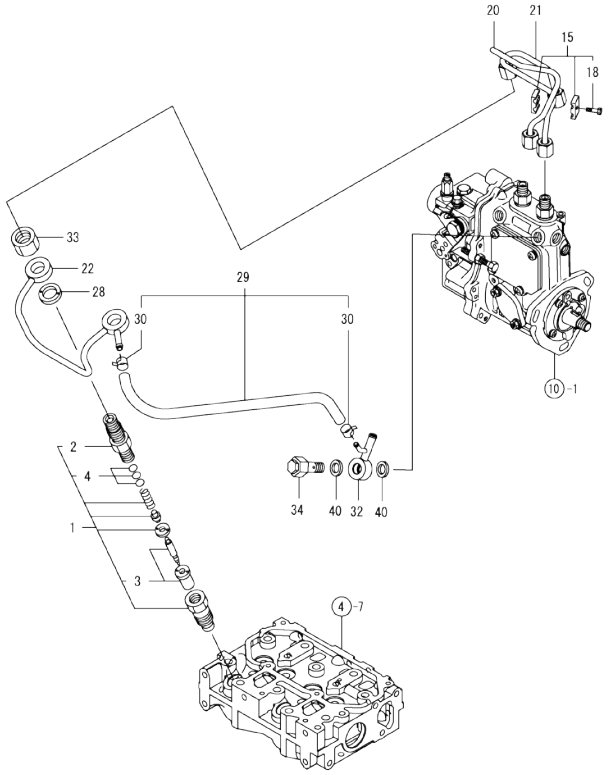

Remarks
(1) REPAIR PART.

(A)=2TNV70-MTA (D)=
(B)= (E)=
(C)= (F)=

No.	Lev.	Parts No.	Description	Q'ty (A)	(B)	(C)	(D)	(E)	(F)	I	R
1	1	119515-53001	VALVE ASSY,INJECTION	2							
2	2	118200-53010	HOLDER, NOZZLE	2							
3	2	119515-53010	VALVE ASSY,INJECTION	2							
4	2	129901-53800	SHIM SET, ADJUSTING	2							1
15	1	119305-59120	RETAINER, PIPE	1							
18	2	129150-59131	BOLT, M4X14	1							
20	1	119415-59810	PIPE ASSY, INJECTION	1							
21	1	119415-59820	PIPE ASSY, INJECTION	1							
22	1	119415-59540	PIPE ASSY, RETURN	1							
28	1	129901-59560	GASKET	2							
29	1	119540-59570	PIPE ASSY, RETURN	1							
30	2	124066-59100	CLIP, HOSE 8	2							
32	1	119840-59570	JOINT	1							
33	1	119620-59700	NUT, NOZZLE	2							
34	1	119813-59950	VALVE ASSY, CHECK	1							
40	1	22190-120002	WASHER, SEAL 12	2							

N:Old ←Yes/No→ New. Q:Old ←No/Yes→ New. R:Old ←Yes/Yes→ New. S:Old ←No/No→ New. W:Add. Z:Discontinued. F:Interchangeable by set. K:Q'ty Change

Copyright (C) YANMAR CO., LTD. All RightsReserved.

Fig.13. FUEL FILTER

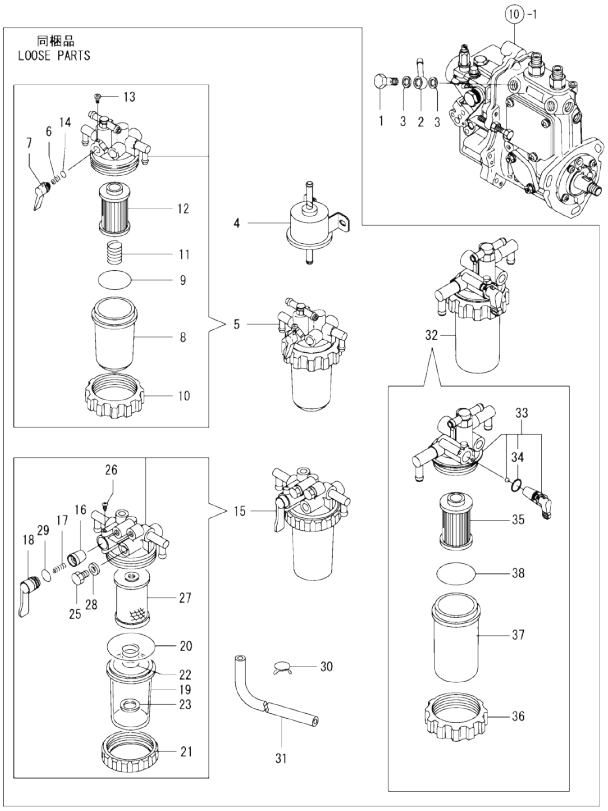

Remarks
(1)Ref.No.5& Ref.No.32
interchangeable by set.

(A)=2TNV70-MTA (D)=
(B)= (E)=
(C)= (F)=

No.	Lev.	Parts No.	Description	Q'ty (A)	(B)	(C)	(D)	(E)	(F)	I	R
1	1	103854-39140	BOLT, PIPE JOINT	1							
2	1	101304-59020	JOINT, PIPE 12	1							
3	1	22190-120002	WASHER, SEAL 12	2							
4	1	119225-52102	PUMP ASSY, FUEL FEED	1							
5	1	119833-55620	FILTER ASSY, FUEL	1							1
6	2	104200-55330	SPRING, VALVE	1							
7	2	119810-55340	LEVER	1							
8	2	121254-55510	COVER	1							
9	2	102103-55520	O-RING	1							
10	2	110250-55610	RING, RETAINING	1							
11	2	121250-55620	SPRING	1							
12	2	119810-55650	ELEMENT	1							
13	2	104200-55750	SCREW, M4	1							
14	2	24311-240100	O-RING, 1AP10A	1							
15	1	129335-55700	SEPARATOR ASSY,WATER	1							
16	2	104200-55321	VALVE, TAPER	1							
17	2	104200-55330	SPRING, VALVE	1							
18	2	104200-55341	HANDLE	1							
19	2	124064-55510	COVER	1							
20	2	102103-55520	O-RING	1							
21	2	110250-55610	RING, RETAINING	1							
22	2	121257-55720	SPRING	1							
23	2	121257-55731	FLOAT	1							
25	2	101720-55750	PLUG, 6	2							
26	2	104200-55750	SCREW, M4	1							
27	2	171081-55910	SCREEN	1							
28	2	23418-060000	GASKET, 6X1.0	2							
29	2	24311-240100	O-RING, 1AP10A	1							
30	1	124766-59050	CLIP, HOSE 12	19							
31	1	121525-59090	PIPE, FUEL D12X2500	1							
32	1	119833-55630	FILTER ASSY, FUEL	1						W	1
	(A=EXXXXX)										
33	2	119833-55640	BODY ASSY,FILTER	1						W	
	(A=EXXXXX)										
34	3	24311-000110	O-RING, 1AP11.0	1						W	
	(A=EXXXXX)										
35	2	119833-55650	ELEMENT, FUEL	1						W	
	(A=EXXXXX)										
36	2	119833-55660	RING, RETAINING	1						W	
	(A=EXXXXX)										
37	2	119833-55670	BOWL, STRAINER	1						W	
	(A=EXXXXX)										
38	2	24311-000440	O-RING, 1AP44.0	1						W	
	(A=EXXXXX)										

N:Old ←Yes/No→ New. Q:Old ←No/Yes→ New. R:Old ←Yes/Yes→ New. S:Old ←No/No→ New. W:Add. Z:Discontinued. F:Interchangeable by set. K:Q'ty Change

Copyright (C) YANMAR CO., LTD. All RightsReserved.

Fig.14. STARTING MOTOR

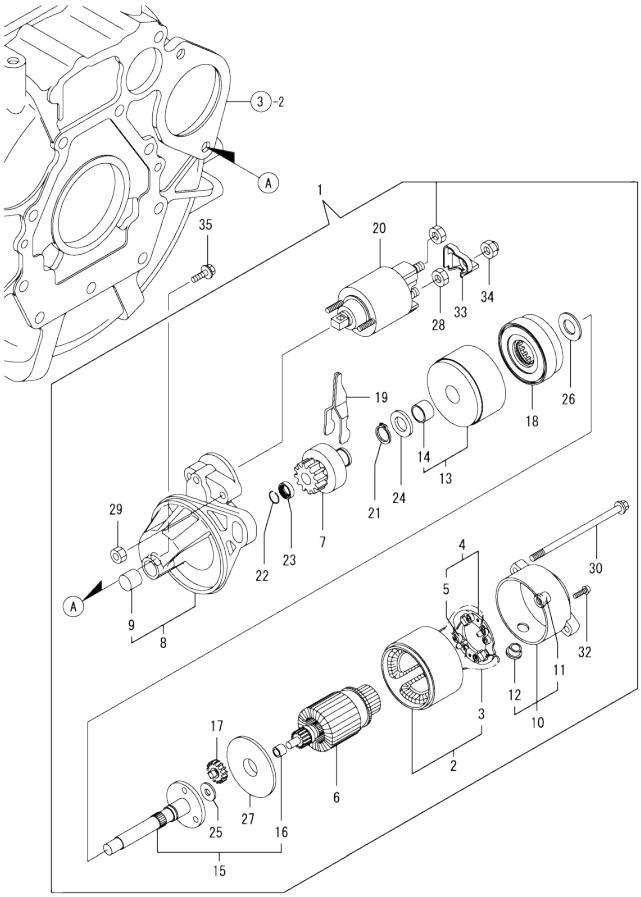

(A)=2TNV70-MTA (D)=
(B)= (E)=
(C)= (F)=

No.	Lev.	Parts No.	Description	Q'ty (A)	(B)	(C)	(D)	(E)	(F)	I	R
1	1	119515-77010	STARTER, P1.1	1							
2	2	X0281007680	YOKE ASSY	1							
3	3	X0280996180	STARTER KIT	2							
4	2	X0285105190	HOLDER ASSY	1							
5	3	X0285205030	SPRING	4							
6	2	X0282005871	ARMATURE ASSY	1							
7	2	X0283006960	CLUTCH ASSY	1							
8	2	X4284001590	HOUSING ASSY,STARTER	1							
9	3	X9491050100	BEARING, NEEDLE	1							
10	2	X0285007030	FRAME ASSY.	1							
11	3	X9491040990	BEARING	1							
12	3	X0280626010	COVER	1							
13	2	X0284105040	BEARING ASSY	1							
14	3	X9491034330	BEARING	1							
15	2	X0286105010	SHAFT ASSY	1							
16	3	X9491034320	BEARING	1							
17	2	X0286305010	GEAR	3							
18	2	X0286355010	GEAR	1							
19	2	X0287405140	LEVER	1							
20	2	X0534007800	SWITCH ASSY	1							
21	2	X9055715000	RING	1							
22	2	X9490721360	RING	1							
23	2	X0280210331	NUT	1							
24	2	X9490138110	WASHER	1							
25	2	X9490138090	WASHER	1							
26	2	X9490138100	WASHER	1							
27	2	X0284525010	PLATE	1							
28	2	X9490562360	NUT	1							
29	2	X9490560750	NUT	2							
30	2	X9490423520	BOLT, THROUGH	2							
32	2	X9490065670	SCREW, M4X6	2							
33	2	X0280335360	COVER, TERMINAL	1							
34	2	X1289510130	NUT	1							
35	1	26106-100252	BOLT, M10X 25 PLATED	2							

N:Old ←Yes/No→ New. Q:Old ←No/Yes→ New. R:Old ←Yes/Yes→ New. S:Old ←No/No→ New. W:Add. Z:Discontinued. F:Interchangeable by set. K:Q'ty Change

Copyright (C) YANMAR CO., LTD. All RightsReserved.

Fig.15. GENERATOR

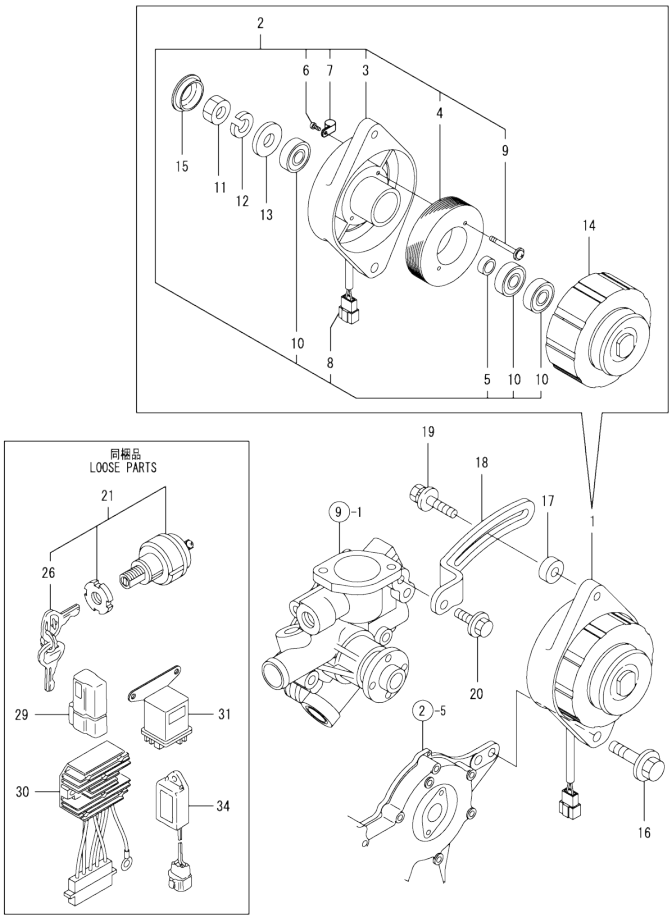

(A)=2TNV70-MTA
(B)=
(C)=
(D)=
(E)=
(F)=

No.	Lev.	Parts No.	Description	Q'ty (A)	(B)	(C)	(D)	(E)	(F)	I	R
1	1	119910-77200	DYNAMO ASSY	1							
2	2	X2A10592KA	PLATE ASSY	1							
3	3	X2A07075KB	PLATE, COIL	1							
4	3	X3A02982KC	STATOR ASSY	1							
5	3	X4A10092KA	COLLAR	1							
6	3	XYSPS400800	SCREW	1							
7	3	XM069000000	CLAMP	1							
8	3	XM771860000	COUPLER	1							
9	3	119259-77250	SCREW, WASHER SET	2							
10	3	24104-062010	BEARING, 6201UUC3	3							
11	2	XM863720000	NUT	1							
12	2	XM219230000	WASHER, SPRING	1							
13	2	XM860250000	WASHER, PLAIN	1							
14	2	X3A08863KA	FLYWHEEL ASSY	1							
15	2	XM771870000	CAP	1							
16	1	26106-100452	BOLT, M10X 45 PLATED	1							
17	1	119940-77270	SPACER, GENERATOR	1							
18	1	119734-77330	ADJUSTER	1							
19	1	129972-77341	BOLT, ADJUSTER L=50	1							
20	1	26106-080202	BOLT, M8X 20 PLATED	1							
21	1	194215-52110	SWITCH, STARTING	1							
26	2	194155-52160	KEY ASSY	1							
29	1	119643-66900	DIODE	1							
30	1	129150-77711	LIMITER, CURRENT 20A	1							
31	1	119650-77910	RELAY ASSY, GLOW	1							
34	1	129211-77920	TIMER	1							

N:Old ◄Yes/No► New. Q:Old ◄No/Yes► New. R:Old ◄Yes/Yes► New. S:Old ◄No/No► New. W:Add. Z:Discontinued. F:Interchangeable by set. K:Q'ty Change

Copyright (C) YANMAR CO., LTD. All RightsReserved.

Fig.16. GASKET SET

(A)=2TNV70-MTA
(B)=
(C)=
(D)=
(E)=
(F)=

No.	Lev.	Parts No.	Description	Q'ty (A)	(B)	(C)	(D)	(E)	(F)	I	R
1	1	719415-92720	GASKET SET	1							1
2	2	119415-01330	GASKET, HEAD	1							
3	2	119624-32040	O-RING, P12.0	1							
4	2	119717-32050	O-RING, P17.0	3							
5	2	121850-51960	O-RING	1							
6	2	24311-000320	O-RING, 1AP32.0	2							
7	2	22190-160002	WASHER, SEAL 16	1							
8	2	129901-11450	PROTECTOR, NOZZLE	2							
9	2	119600-11460	GASKET, NOZZLE	4							
10	2	119717-11340	SEAL, VALVE STEM	2							
11	2	119717-11350	SEAL, VALVE STEM	2							
12	2	119415-11310	GASKET, BONNET	1							
13	2	119415-11330	GASKET	1							
14	2	119415-13110	GASKET	1							
15	2	119515-13200	GASKET, SILENCER	3							
16	2	119717-32060	O-RING, P15.0	1							
17	2	22190-080002	WASHER, SEAL 6	4							
18	2	119515-42020	GASKET, WATER PUMP	1							
19	2	23414-080000	GASKET, 8X1.0	1							
20	2	124465-44950	GASKET, 16	2							
21	2	129901-59560	GASKET	2							
22	2	22190-120002	WASHER, SEAL 12	4							
23	1	129400-92410	FLEX HORN	1							1
24	1	977770-01212	GASKET, LIQUID	1							1
25	1	119332-92751	WRENCH, FILTER 68	1							
26	1	171051-92760	WRENCH, STRAINER	1							

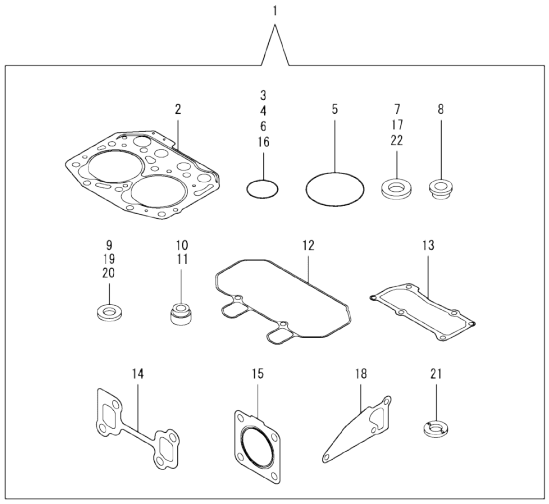

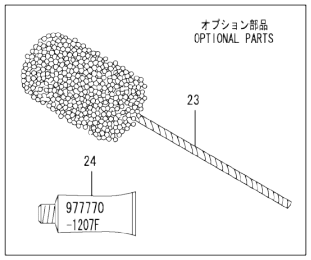

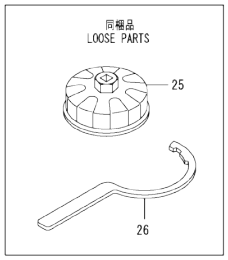

Remarks
(1) OPTIONAL PART.

N:Old ←Yes/No→ New. Q:Old ←No/Yes→ New, R:Old ←Yes/Yes→ New. S:Old ←No/No→ New. W:Add. Z:Discontinued. F:Interchangeable by set. K:Q'ty Change

Copyright (C) YANMAR CO., LTD. All RightsReserved.

Parts No. Index

Parts No.	Fig. No.	Ref. No.
101304-59020	13	2
101720-55750	13	25
102103-55520	13	9
		20
103854-39140	13	1
104200-55321	13	16
104200-55330	13	6
		17
104200-55341	13	18
104200-55750	13	13
		26
105010-11490	4	6
105027-12580	5	11
105311-01090	1	4
105425-01690	3	9
110250-55610	13	10
		21
114250-39450	8	11
118200-53010	12	2
118400-51370	10	47
119131-18320	5	5
119225-52102	13	4
119226-07900	4	1
119233-44740	9	19
119233-77932	11	135
119255-44660	9	42
119259-77250	15	9
119285-01990	1	6
119285-11990	4	12
119305-35151	8	4
119305-59120	12	15
119325-12550	5	7
119325-13500	5	14
119332-92751	16	25
119415-01330	1	27
	16	2
119415-01720	3	7
119415-11200	4	23
119415-11240	4	24
119415-11310	4	47
	16	12
119415-11320	4	48
119415-11330	4	49
	16	13
119415-11380	4	37
119415-11740	4	7
119415-13100	5	1
119415-13110	5	2
	16	14
119415-14581	6	3

Parts No.	Fig. No.	Ref. No.
119415-21700	7	1
119415-39211	8	12
119415-51030	10	5
119415-51400	10	48
119415-51500	10	63
119415-51700	10	93
119415-51710	10	94
119415-51750	10	95
119415-51760	10	96
119415-59540	12	22
119415-59810	12	20
119415-59820	12	21
119415-77820	4	57
119446-01770	3	8
119446-34801	8	1
119446-35080	8	6
119515-01200	1	26
119515-01601	3	2
119515-11101	4	14
119515-11110	4	15
119515-11280	4	28
119515-11800	4	22
119515-13200	5	13
	16	15
119515-14400	6	2
119515-21570	7	8
119515-22080	7	14
119515-22300	7	20
119515-22500	7	16
119515-22550	7	33
119515-22900	7	31
119515-23000	7	22
119515-23601	7	26
119515-23611	7	29
119515-42020	9	13
	16	18
119515-42041	9	3
119515-44600	9	32
119515-44610	9	33
119515-51100	10	9
119515-53001	12	1
119515-53010	12	3
119515-61440	11	28
119515-61550	11	91
119515-77010	14	1
119534-61420	11	26
119534-61430	11	27
119540-42000	9	1
119540-59570	12	29
119540-61300	11	9

Parts No.	Fig. No.	Ref. No.
119600-11460	4	5
	16	9
119620-01750	3	4
119620-02020	1	7
119620-14200	6	1
119620-21500	7	7
119620-21941	7	13
119620-59700	12	33
119621-21680	7	12
119623-01250	1	5
119624-32040	2	18
	16	3
119629-49080	9	48
119641-12570	5	12
119643-66900	15	29
119650-77910	15	31
119655-12560	5	9
119660-01911	2	17
119660-61901	11	72
119686-12570	5	10
119717-01501	2	1
119717-01521	2	5
119717-01570	2	2
119717-01750	2	16
119717-01800	2	6
119717-02411	1	10
119717-02930	1	23
119717-03031	4	38
119717-03070	4	39
		40
119717-11131	4	16
119717-11190	4	18
119717-11260	4	27
119717-11340	4	19
	16	10
119717-11350	4	20
	16	11
119717-11650	4	29
119717-13600	5	3
119717-21650	7	11
119717-23200	7	25
119717-23910	7	28
119717-25050	6	9
119717-25101	6	10
119717-25911	6	14
119717-25930	6	16
119717-32050	2	19
	16	4
119717-32060	8	5
	16	16

Parts No.	Fig. No.	Ref. No.
119717-32080	2	9
119717-32100	2	8
119717-32110	2	13
119717-32120	2	14
119717-42031	9	4
119717-42320	9	11
119717-44500	9	30
119717-49800	9	23
119717-51060	10	6
119717-51070	10	7
119717-51150	6	17
119717-51190	10	14
119717-51200	10	15
119717-51300	10	42
119717-51330	10	45
119717-51420	10	50
119717-51480	10	108
119717-51490	10	109
119717-51570	10	69
119717-61050	11	2
119717-61060	11	3
119717-61070	11	4
119717-61120	11	12
119717-61130	11	13
119717-61140	11	14
119717-61150	11	15
119717-61200	11	5
119717-61400	11	18
119717-77800	4	56
119734-01590	2	3
119734-77330	15	18
119740-42350	9	17
119761-61500	11	37
119802-03100	4	41
119802-03110	4	42
119802-03121	4	43
119802-03131	4	44
119802-03141	4	45
119802-13620	5	4
119802-32130	2	15
119802-44560	9	41
119802-44570	9	41 -1
119802-49010	9	43
119808-12540	5	8
119810-02941	1	34
119810-55340	13	7
119810-55650	13	12
119813-59950	12	34
119833-55620	13	5
119833-55630	13	32

Parts No. Index

Parts No.	Fig. No.	Ref. No.
119833-55640	13	33
119833-55650	13	35
119833-55660	13	36
119833-55670	13	37
119840-59570	12	32
119910-77200	15	1
119940-49020	9	44
119940-77270	15	17
119C10-42000	9	1 -1
119C10-42320	9	11 -1
121120-01620	3	3
121250-44901	9	27
121250-55620	13	11
121254-55510	13	8
121257-55720	13	22
121257-55731	13	23
121267-44760	9	20
121450-42450	9	26
121450-44531	9	37
121468-44520	9	35
121470-44581	9	39
121520-34810	8	2
121522-42290	9	18
121525-59090	13	31
121550-49111	9	25
121850-51960	2	20
	16	5
122710-51090	10	8
124060-01050	1	11
124064-55510	13	19
124066-59100	12	30
124085-02220	3	5
124160-01751	2	28
	4	36
124160-01910	1	12
124450-44560	9	38
124465-44950	9	28
		29
	16	20
124550-51350	10	46
124766-59050	13	30
124950-21600	7	10
129001-32320	2	11
129001-32330	2	12
129005-59830	8	13
129008-61301	11	77
129030-44760	9	20 -1
129052-61390	11	17
129100-01580	3	1
	7	2

Parts No.	Fig. No.	Ref. No.
129100-35140	8	3
129100-51560	10	68
129100-51570	10	70
129100-52200	10	113
129100-61650	11	66
129107-44590	9	31
129150-11230	4	30
129150-11750	4	32
129150-25301	6	15
129150-49080	9	46
129150-49100	9	45
129150-59131	12	18
129150-77711	15	30
129155-51020	10	4
129155-51140	10	12
129155-51280	10	40
		41
	11	10
129155-51450	10	58
129155-51521	10	64
129155-51530	10	65
129155-51540	10	66
129155-51550	10	67
129155-51580	10	72
129155-51591	10	73
129155-51600	10	19
		74
129155-52051	10	112
129155-61341	11	78
129155-61450	11	29
129155-61460	11	79
129155-61480	11	31
129156-61460	11	30
129209-61370	11	16
129209-61920	11	81
129209-61930	11	133
129209-61970	11	134
129211-77920	15	34
129255-61410	11	25
129335-55700	13	15
129350-49530	9	22
129400-92410	16	23
129486-07901	4	2
129486-61540	11	56
129500-61720	11	124
129508-11180	4	17
129900-32130	2	10
129901-11450	4	4
	16	8
129901-53800	12	4

Parts No.	Fig. No.	Ref. No.
129901-59560	12	28
	16	21
129916-49740	9	12
129972-77341	15	19
158552-61700	11	67
158552-61710	11	71
158552-61900	11	80
158600-51170	10	13
158600-51270	10	39
158600-51410	10	49
158600-51420	10	51
158600-51442	10	52
158600-51570	10	71
158600-51790	10	97
158601-61790	11	125
171051-92760	16	26
171081-55910	13	27
171351-49170	9	50
174307-51700	11	38
194155-52160	15	26
194215-52110	15	21
22190-080002	8	14
		16
	16	17
22190-100002	11	82
22190-120002	11	83
	12	40
	13	3
	16	22
22190-160002	3	11
	10	98
	16	7
22217-060000	10	99
22217-120000	6	18
22242-000120	4	33
22252-000220	7	21
22272-000030	11	73
22351-050010	10	100
22351-060012	4	21
22372-040000	11	84
22512-040120	7	5
22857-500100	4	50
		51
22857-500160	4	52
23000-060000	5	15
23010-038000	9	51
23065-070130	9	40
23414-080000	9	14
	16	19
23414-120016	11	136

Parts No.	Fig. No.	Ref. No.
23418-060000	13	28
23857-030000	8	15
23876-005000	4	13
23876-030000	2	7
23887-100002	11	85
24101-060034	10	101
24101-063034	10	102
24104-062010	15	10
24311-000110	13	34
24311-000320	2	29
	4	53
	16	6
24311-000440	13	38
24311-240100	13	14
		29
24316-000150	10	103
24341-000070	11	74
26014-060122	9	34
26022-050122	10	104
26022-060162	10	105
26106-050102	10	106
26106-060102	8	10
	11	75
		76
		86
26106-060122	2	21
	3	12
	6	8
26106-060142	11	87
26106-060162	2	22
26106-060202	4	54
	11	88
26106-060252	3	13
26106-060302	9	21
26106-060352	6	13
26106-060402	2	23
		24
26106-060452	3	14
	11	89
26106-060502	9	21 -1
26106-060602	2	25
26106-060652	2	26
26106-060752	4	55
26106-080122	9	15
26106-080142	4	3
26106-080202	9	24
	15	20
26106-080402	4	35
26106-080502	9	16
26106-100252	14	35

Parts No. Index

Parts No.	Fig. No.	Ref. No.
26106-100452	15	16
26206-100252	3	6
26306-080002	2	27
	5	6
26577-060122	9	9
26716-060002	10	107
26716-120002	6	19
26756-060002	11	90
26979-050162	4	34
27241-120000	1	13
27241-250000	9	10
719415-01561	1	1
719415-92720	16	1
719440-51430	10	1
719717-02901	1	28
719717-02911	1	31
719734-01500	2	4
977770-01212	16	24
X0280210331	14	23
X0280335360	14	33
X0280626010	14	12
X0280996180	14	3
X0281007680	14	2
X0282005871	14	6
X0283006960	14	7
X0284105040	14	13
X0284525010	14	27
X0285007030	14	10
X0285105190	14	4
X0285205030	14	5
X0286105010	14	15
X0286305010	14	17
X0286355010	14	18
X0287405140	14	19
X0534007800	14	20
X1289510130	14	34
X2A07075KB	15	3
X2A10592KA	15	2
X3A02982KC	15	4
X3A08863KA	15	14
X4284001590	14	8
X4A10092KA	15	5
X9055715000	14	21
X9490065670	14	32
X9490138090	14	25
X9490138100	14	26
X9490138110	14	24
X9490423520	14	30
X9490560750	14	29
X9490562360	14	28

Parts No.	Fig. No.	Ref. No.
X9490721360	14	22
X9491034320	14	16
X9491034330	14	14
X9491040990	14	11
X9491050100	14	9
XM069000000	15	7
XM219230000	15	12
XM771860000	15	8
XM771870000	15	15
XM860250000	15	13
XM863720000	15	11
XYSPS400800	15	6

Parts No.	Fig. No.	Ref. No.

Parts No.	Fig. No.	Ref. No.